DATE	SYM	REVISION	DR	CK	APPR

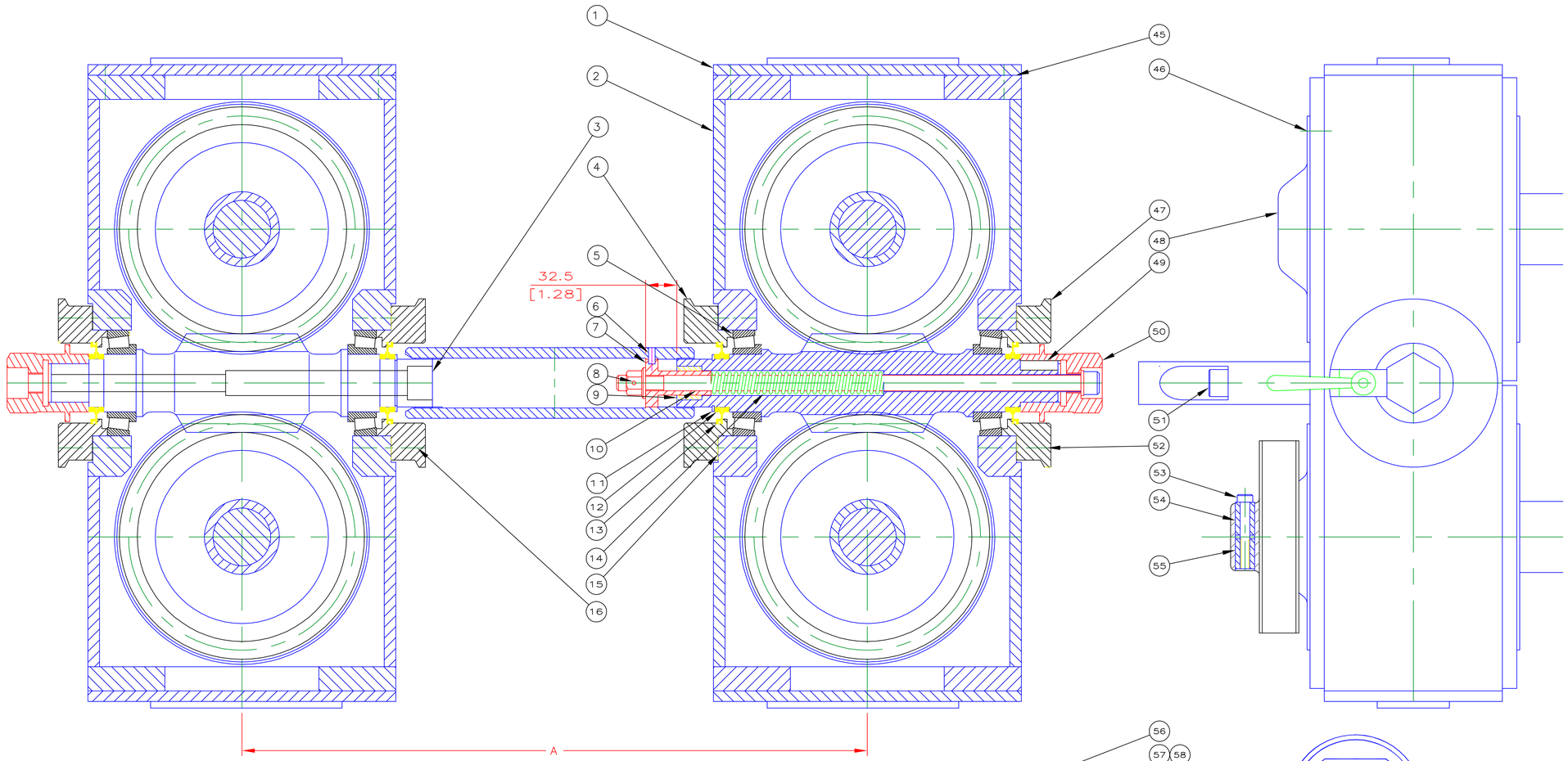

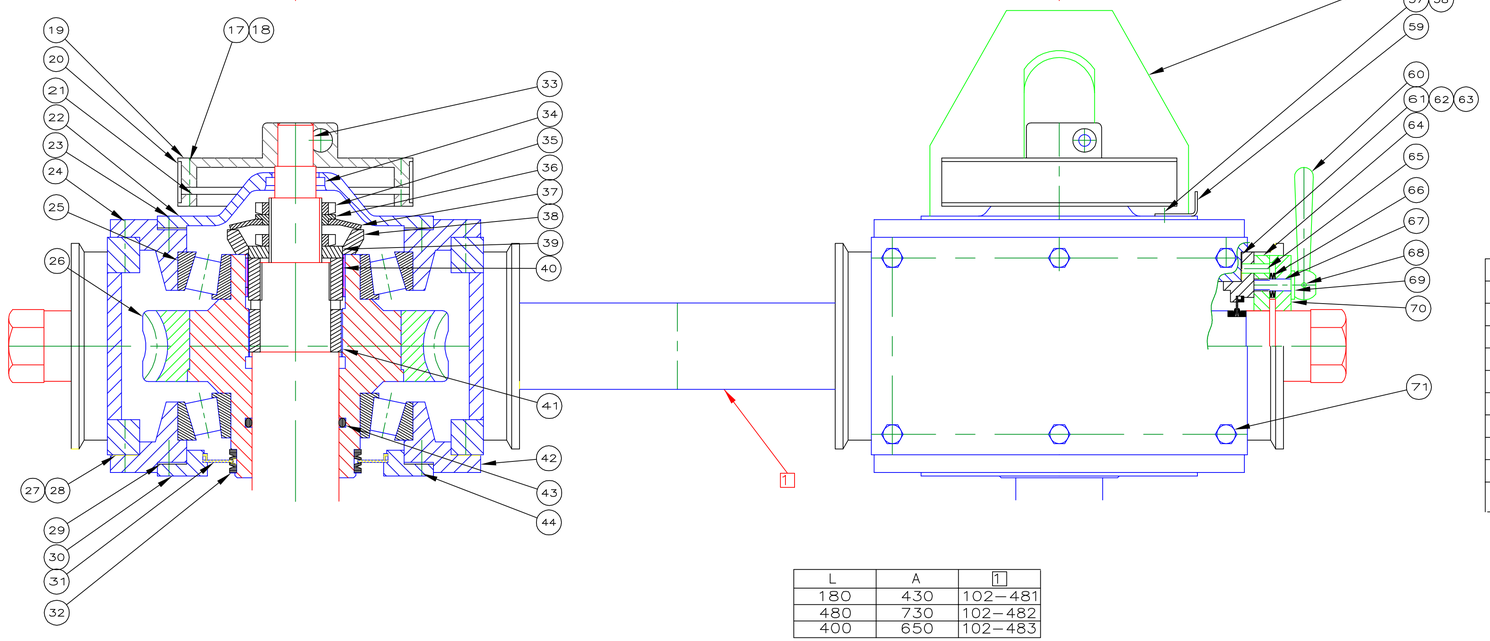

L	A	1
180	430	102–481
480	730	102–482
400	650	102–483

ITEM	PART No.	DESCRIPTION	QTY
61	102–458	SHIM	4
60	105–243	CLAMPING LEVER	2
59	102–501	FINGER	2
58		LOCK WASHER M6	2
57		H.H.C.S. M6x1x12	2
56	102–499	EYE BOLT	2
55	102–997	PLUG	2
54	102–741	PLUG	2
53		S.H.C.S. M10x1.5x65	2
52		H.H.C.S. M12x1.75x50	12
51		S.H.C.S. M20x2.5x120GR12.9	4
50	102–252	ADAPTER	2
49		KEY 12x8x40	2
48	102–497	COVER	2
47	102–494	COVER	2
46		H.H.C.S. M8x1.25x25	8
45	102–505	PACKING	4
44		H.H.C.S. M8x1.25x25	16
43		O–RING 73x7	4
42	102–495	COVER	8
41	102–247	SCREW,LOCK	4
40	102–256	SLEEVE,SPLINED	4
39	102–244	WASHER	4
38	102–245	DISTANCE RING	4
37	350–360	SPRING WASHER 112x4	4
36	102–510	SLEEVE	4
35		NUT SKF MB–9 & KM–9	8
34	350–324	SEAL A35x50x7	2
33	101–921	STUB	2
32	350–096	V–RING V100–A	8
31	350–092	SEAL,WASHER	4
30	102–496	COVER	4
29	102–509	PACKING	8
28	102–508	SHIM	16
27	102–507	SHIM	8
26	200–204	WORMGEAR ASS'Y L.H.	4
25	350–319	BEARING SKF 30222	8
24		H.H.C.S. M12x1.75x30	64
23		H.H.C.S. M8x1.25x25	8
22	102–498	COVER	2
21	102–506	RING	2
20	102–480	INDICATOR	2
19	102–479	INDICATOR DRUM	2
18		LOCKWASHER M6	8
17		H.H.C.S.M6x1x40	8
16		H.H.C.S. M12x1.75x50	12
15	102–459	SHIM	2
14	102–349	SPRING	1
13	350–091	SEAL,WASHER	4
12	350–095	V–RING V–50A	8
11	350–321	RETAINER RING SgA50	2
10	102–350	BOLT	1
9	350–320	BUSHING	1
8		ROLL PIN SP4x40	1
7	102–348	ADJ. NUT	1
6		S.H.S.S. M10x1.5x16	3
5	350–318	BEARING SKF 32212	4
4	102–493	COVER	2
3	102–255	WORM SHAFT L.H.	2
2	200–348	GEAR BOX	2
1	105–287	END PLATE	4

ITEM	PART No.	DESCRIPTION	QTY
71		H.H.C.S. M10x1.5x16 GR12.9	24
70	105–244	CLAMP	2
69		WASHER,HARD 22x10x3	2
68		ROLL PIN ø4x25	2
67	105–245	STUD	2
66	350–361	SPRINGWASHER 20x.8	8
65		PIN ø8x20	2
64	105–246	PLATE	2
63	102–460	SHIM	2
62	102–459	SHIM	8

KONRAD CORPORATION
1421 HANLEY RD.
HUDSON WI 54016
1–800–359–4200
FAX (715) 386–4219

ORIGINAL EQUIPMENT MANUFACTURERS NAMES, DRAWINGS, COLORS, AND PART NUMBERS ARE FOR IDENTIFICATION PURPOSES ONLY; WE ARE IN NO WAY IMPLYING THAT ANY OF OUR PARTS ARE THE ORIGINAL EQUIPMENT MANUFACTURERS PRODUCT

NEXT ASSY | TOLERANCE | Konrad Corporation

X ± 1MM | Matl | Scale 375:1 | Drawn By | Approv.By

.X ± .5MM | TITLE GEAR BOX ASS'Y P–624

.XX ± .25MM | Date 10–13–92 | DRAWING NUMBER 230–056